HPS 2-Position Spring Return ELT Schematic

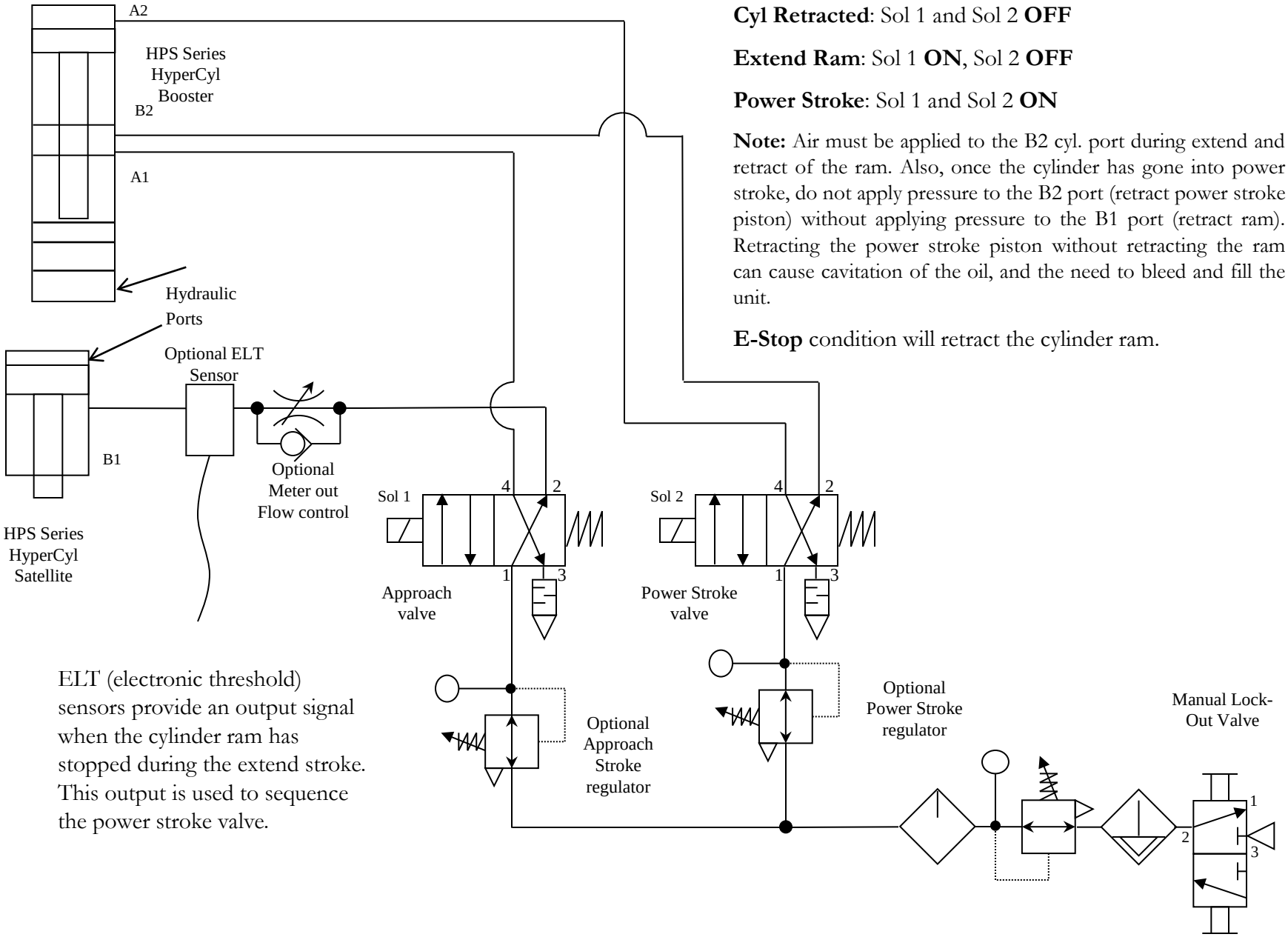

Cyl Retracted: Sol 1 and Sol 2 **OFF**

Extend Ram: Sol 1 **ON**, Sol 2 **OFF**

Power Stroke: Sol 1 and Sol 2 **ON**

Note: Air must be applied to the B2 cyl. port during extend and retract of the ram. Also, once the cylinder has gone into power stroke, do not apply pressure to the B2 port (retract power stroke piston) without applying pressure to the B1 port (retract ram). Retracting the power stroke piston without retracting the ram can cause cavitation of the oil, and the need to bleed and fill the unit.

E-Stop condition will retract the cylinder ram.

ELT (electronic threshold) sensors provide an output signal when the cylinder ram has stopped during the extend stroke. This output is used to sequence the power stroke valve.